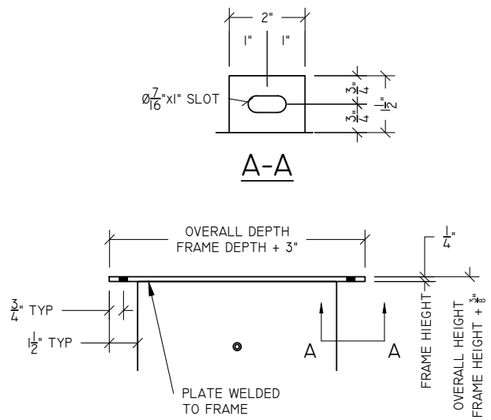

1 TOP MOUNT PLATE

NOT TO SCALE

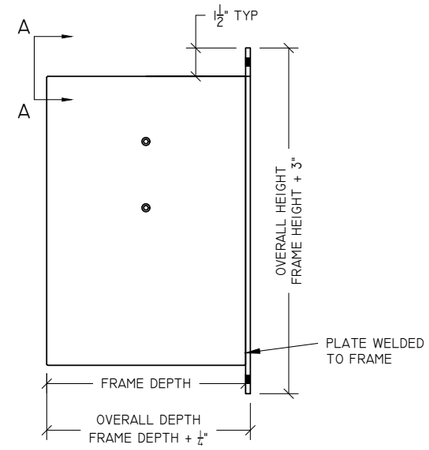

2 REAR MOUNT PLATE

NOT TO SCALE

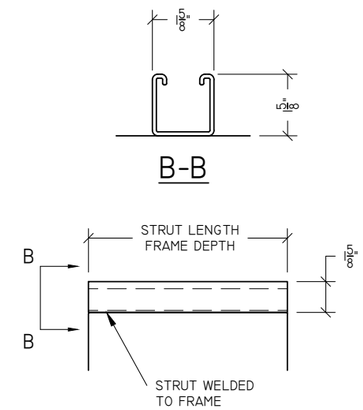

3 TOP MOUNT STRUT

NOT TO SCALE

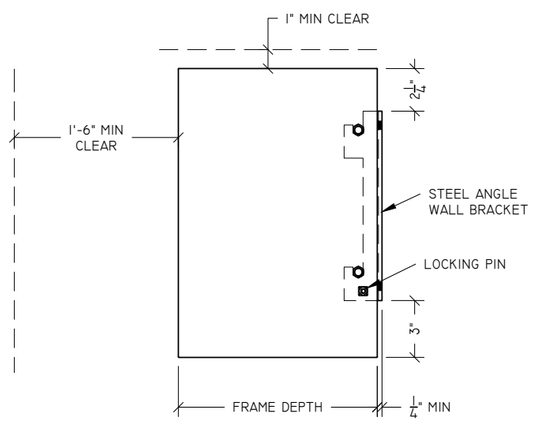

4 BLIND MOUNT

NOT TO SCALE

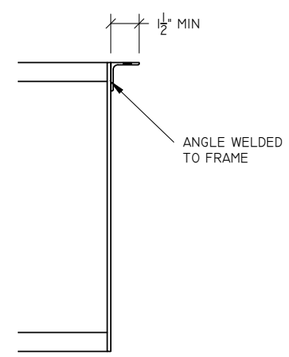

5 END MOUNT

NOT TO SCALE

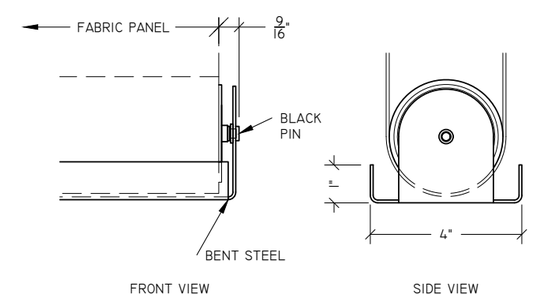

6 BOTTOM CLOSURE PANEL

NOT TO SCALE

STEEL PANEL PAINTED TO CUSTOMERS COLOR SELECTION.
PIN END IS BLACK PLASTIC.

REV:	DATE:	BY:	DESCRIPTION:

8053 POTRANCO ROAD
SAN ANTONIO, TEXAS 78251
210-684-0091
210-684-4557 FAX

THIS DOCUMENT IS THE PROPERTY OF TEXAS SCENIC COMPANY, INC. THE INFORMATION ON THIS DOCUMENT IS NOT TO BE SOLD OR TRANSFERRED. TEXAS SCENIC COMPANY, INC. RETAINS ALL COPYRIGHTS AND OTHER RIGHTS. USE AND/OR ALTERATION OF THIS DRAWING OR THE INFORMATION CONTAINED HEREIN, IN THE ABSENCE OF A WRITTEN AGREEMENT WITH POSSESSION OF THE DOCUMENT IS ACCEPTED SUBJECT TO THE FOREGOING.

TEXAS SCENIC COMPANY

ARCHITECT:
CONSULTANT:
CONTRACTOR:

DRAWN BY:	CHECK BY:	DATE:	JOB NUMBER:
WJC	TSC	12/7/2023	

PROJECT:
ACOUTUNE
ACOUROLL
SAN ANTONIO, TX

DWG. TITLE:
ACOUROLL
MODEL OPTIONS &
MOUNTING

REV: –

SCALE: AS NOTED

DRAWING NUMBER:
VA-1.23